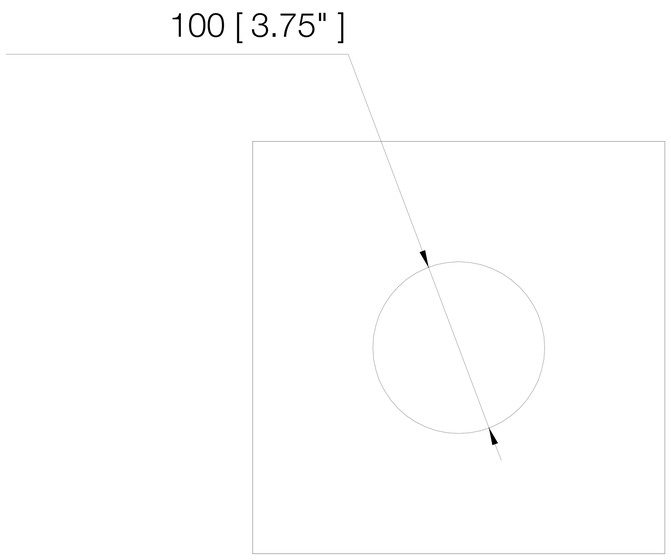
100 [3.75"]

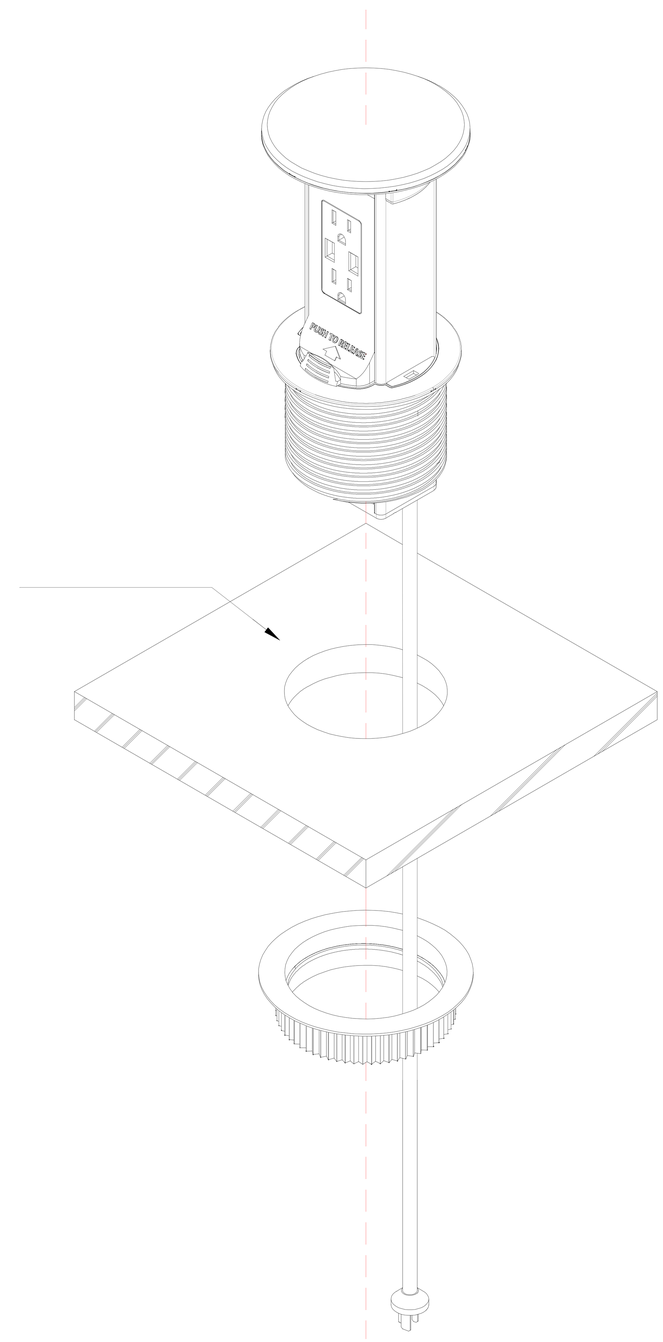
PUSH TO RELEASE

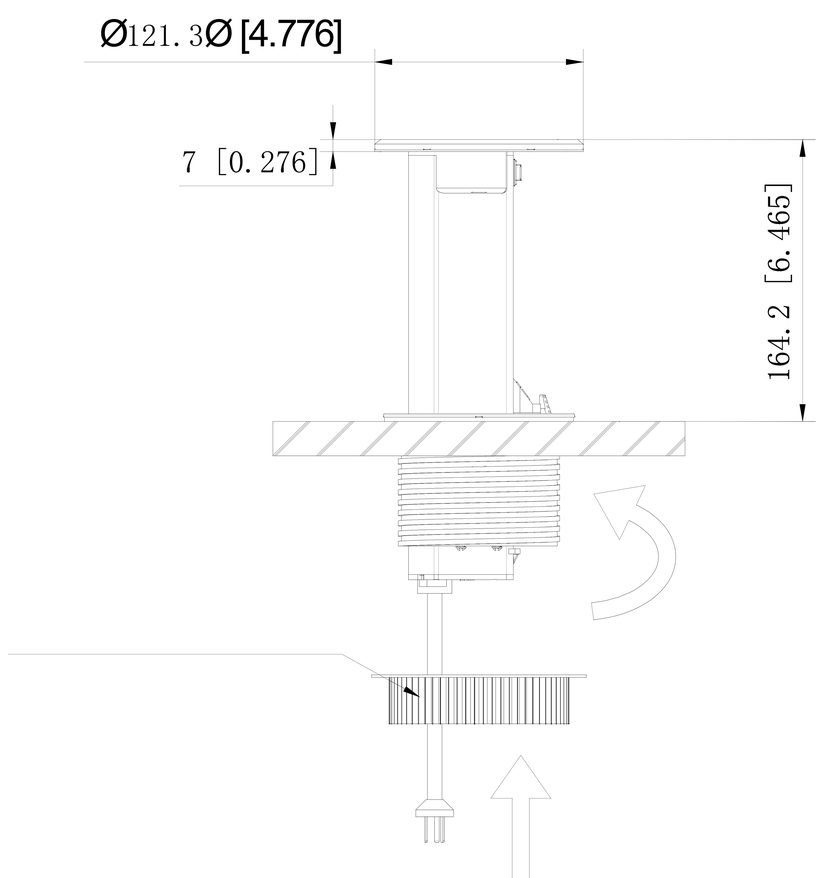
Ø121.3Ø [4.776]
7 [0.276]
164.2 [6.465]

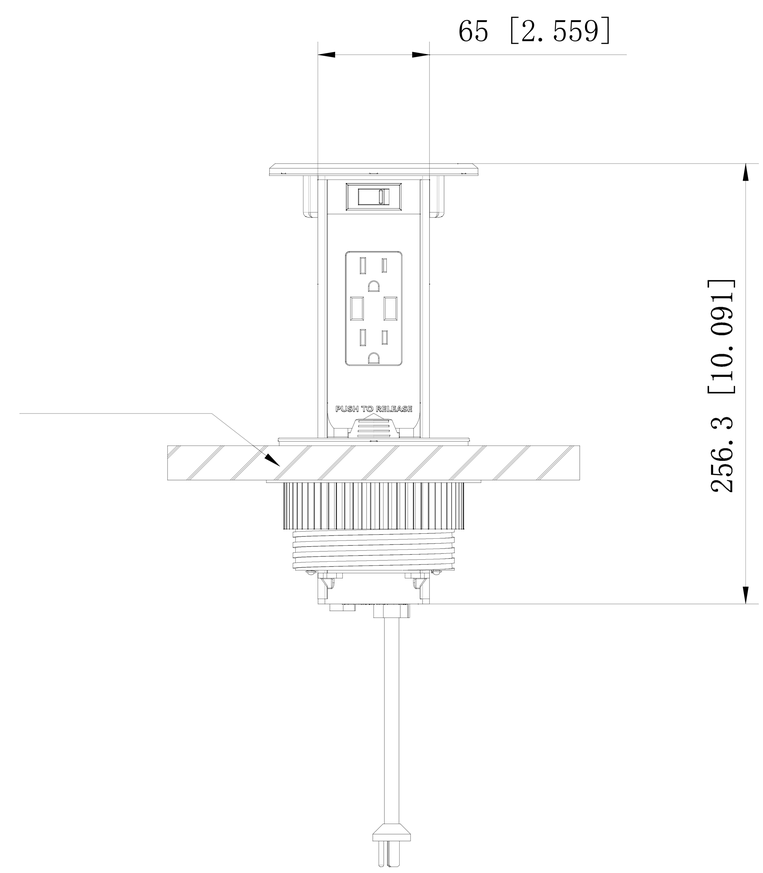
65 [2.559]
256.3 [10.091]
PUSH TO RELEASE