description: square, pop out floor box with brass cover and 20 AMP TR GFI receptacle.

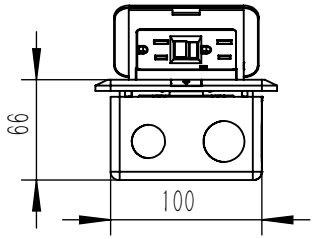

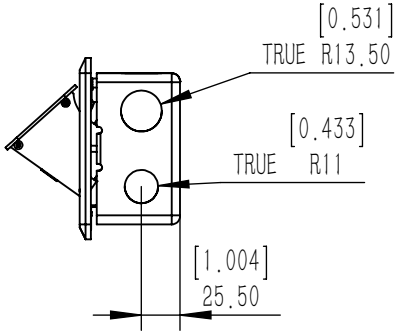

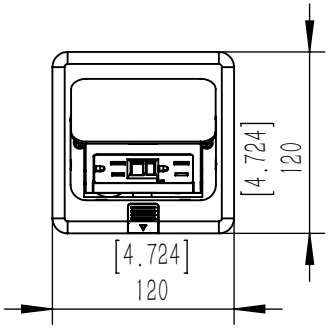

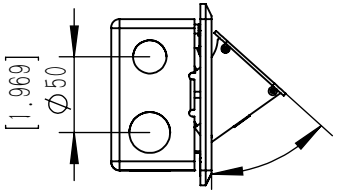

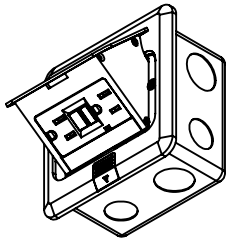

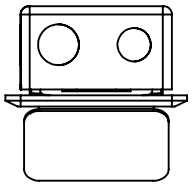

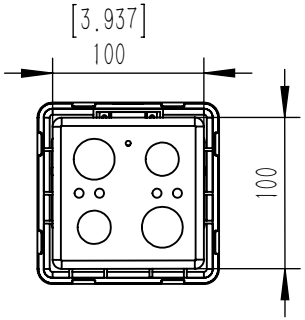

LEW ELECTRIC
FITTINGS COMPANY
SERVING THE ELCTRICAL INDUSTRY SINCE 1901

371 Randy Rd, Carol Stream IL, 60188
PHONE: 630-665-2075

UNLESS OTHERWISE SPECIFIED:
DIMENSIONS ARE IN INCHES
TOLERANCES:
FRACTIONAL ±
ANGULAR: MACH ± BEND ±
TWO PLACE DECIMAL
THREE PLACE DECIMAL ±

INTERPRET GEOMETRIC TOLERANCING PER
MATERIAL
FINISH
DO NOT SCALE DRAWING

	NAME	DATE
DRAWN	PJG	2/1/2006

COMMENTS:

TITLE:
PUFP-SQ-BR-GFI

SIZE	DWG. NO.	REV
C		A

WEIGHT: SHEET 5 OF 16